Drinks Dispense & Water Treatment

Grey Acetal Stem Elbow

Allows for the connection of 2 John Guest fittings to create a swivel type connection

Overview

John Guest grey push-fit acetal stem elbow adapts a push-fit connection to a 90o swivel type connection. Fast and simple to install, John Guest push-fit fittings create an instant push-fit connection and leak tight seal without the need for tools, hot works or sealing agents.

The unique collet locking design firmly and securely holds the pipe in place without deforming the pipe or restricting flow. Fittings are corrosion resistant and fully demountable, improving system performance and reducing system downtime during maintenance.

Manufactured in grey push-fit acetal copolymer, the fitting is suitable for foodstuff, potable liquids and inert gases. In accordance with the British Beer & Pub Association Code of Practice, fittings can also be used with N2/CO2 and mixed gas dispense lines, as well as air, pneumatic and vacuum applications. All John Guest fittings are manufactured and assembled in the UK.



Features & Benefits

- Rigid and hardwearing acetal copolymer material
- Food grade material suitable for foodstuff, potable liquids, inert gases, air, pneumatic and vacuum
- Instant push-fit connection and leak tight seal
- Connect, disconnect and reconnect in seconds without tools
- No scale build up improves performance and equipment lifespan
- Superior flow characteristics
- Compatible with LLDPE or soft metal pipe/tubing

Product code	Description	Size	Bag QTY
PM220404S	Stem Elbow	5/32" x 5/32"	10
PI220606S	Stem Elbow	3/16" x 3/16"	10
PI220808S	Stem Elbow	1/4" x 1/4"	10
PM220808S	Stem Elbow	5/16" x 5/16"	10
PI221206S	Stem Elbow	3/8" x 3/16"	10
PI221208S	Stem Elbow	3/8" x 1/4"	10
PI221210S	Stem Elbow	3/8" x 5/16"	10
PI221212S	Stem Elbow	3/8" x 3/8"	10
PI221616S	Stem Elbow	1/2" x 1/2"	10
PI221212LS	Long Stem Elbow	3/8" x 3/8"	10



PI221212LS

2 YEAR GUARANTEE

WRAS APPROVED PRODUCT

Grey Acetal Stem Elbow

Working parameters & specifications

Minimum & Maximum Temperature	Maximum working pressure, bar
1C-65ºC	10 bar @ 20ºC (7 bar @ 65ºC)
-20ºC (Air only)	10 bar

Materials	
Body	Plastic
O-Ring	Nitrile, Black
Collet	Acetal Copolymer (Unfilled)
Collet Teeth	Stainless Steel 301

Application
Drinks Dispense
Food Grade Liquids
Inert Gases
Vacuum
Pneumatics
Potable Liquid

Dimensions – All measurements in mm unless otherwise stated

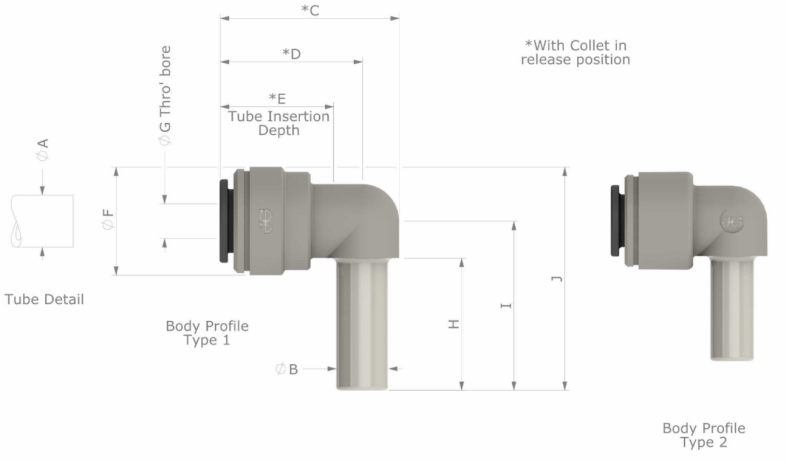

PI221212LS

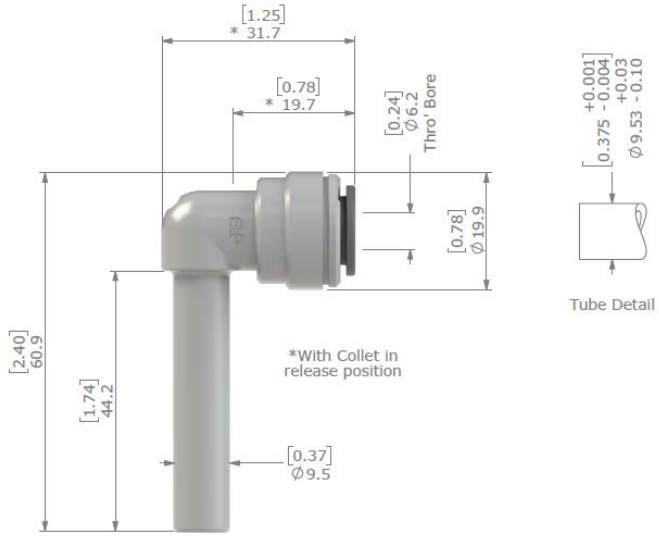

Product No.	Size - Stem O/D - Tube O/D	A Tube O/D	B Stem O/D	C	D	E	F	G	H	I	J	Profile Type
PM220404S	5/32" - 5/32"	0.156 +0.001 / -0.003 [3.97 +0.03 / -0.07]	5/32"	0.86 [21.9]	0.69 [17.6]	0.56 [14.3]	0.51 [13.0]	0.10 [2.5]	0.65 [16.5]	0.82 [20.8]	1.07 [27.3]	2
PI220606S	3/16" - 3/16"	0.188 +0.001 / -0.003 [4.76 +0.03 / -0.07]	3/16"	0.86 [21.9]	0.69 [17.6]	0.56 [14.3]	0.51 [13.0]	0.13 [3.4]	0.65 [16.5]	0.82 [20.8]	1.07 [27.3]	2
PI220808S	1/4" - 1/4"	0.250 +0.001 / -0.004 [6.35 +0.03 / -0.10]	1/4"	0.96 [24.3]	0.77 [19.6]	0.62 [15.7]	0.59 [15.0]	0.18 [4.5]	0.71 [18.0]	0.89 [22.7]	1.19 [30.2]	1
PM220808S	5/16" - 5/16"	0.313 +0.001 / -0.004 [7.94 +0.03 / -0.10]	5/16"	1.02 [25.8]	0.83 [21.0]	0.66 [16.7]	0.70 [17.8]	0.22 [5.6]	0.77 [19.5]	1.00 [25.5]	1.35 [34.4]	1
PI221206S	3/8" - 3/16"	0.188 +0.001 / -0.003 [4.76 +0.03 / -0.07]	3/8"	1.08 [27.5]	0.83 [21.1]	0.56 [14.3]	0.70 [17.8]	0.12 [3.0]	0.95 [24.2]	1.20 [30.6]	1.56 [39.5]	2
PI221208S	3/8" - 1/4"	0.250 +0.001 / -0.004 [6.35 +0.03 / -0.10]	3/8"	1.07 [27.2]	0.82 [20.8]	0.62 [15.7]	0.70 [17.8]	0.21 [5.3]	0.95 [24.2]	1.20 [30.6]	1.56 [39.5]	2
PI221210S	3/8" - 5/16"	0.313 +0.001 / -0.004 [7.94 +0.03 / -0.10]	3/8"	1.31 [33.2]	1.01 [25.6]	0.66 [16.7]	0.78 [19.8]	0.25 [6.3]	0.95 [24.2]	1.25 [31.8]	1.64 [41.7]	2
PI221212S	3/8" - 3/8"	0.375 +0.001 / -0.004 [9.53 +0.03 / -0.10]	3/8"	1.25 [31.7]	0.98 [25.0]	0.78 [19.7]	0.78 [19.9]	0.24 [6.2]	0.95 [24.2]	1.22 [31.0]	1.61 [41.0]	1
PI221212LS	3/8" Long - 3/8"	0.375 +0.001 / -0.004 [9.53 +0.03 / -0.10]	3/8"	1.25 [31.7]	0.98 [25.0]	0.78 [19.7]	0.78 [19.9]	0.24 [6.2]	1.74 [44.2]	2.01 [51.0]	2.40 [61.0]	1
PI221616S	1/2" - 1/2"	0.500 +0.001 / -0.004 [12.7 +0.03 / -0.10]	1/2"	1.53 [38.9]	1.20 [30.5]	0.91 [23.0]	0.91 [23.0]	0.38 [9.6]	1.10 [28.0]	1.43 [36.4]	1.89 [47.9]	1