Drinks Dispense & Water Treatment

Grey Acetal Straight Adaptor (NPTF Thread)

Quickly and easily converts an imperial push-fit connection to an imperial threaded connection

Overview

John Guest grey push-fit acetal straight adaptor (NPTF thread) fitting converts metric pipe to an imperial NPTF type thread for connection to a fitting, fixture or appliance. Fast and simple to install, John Guest push-fit fittings create an instant push-fit connection and leak tight seal without the need for tools, hot works or sealing agents.

The unique collet locking design firmly and securely holds the pipe in place without deforming the pipe or restricting flow. Fittings are corrosion resistant and fully demountable, improving system performance and reducing system downtime during maintenance.

Manufactured in grey push-fit acetal copolymer, the fitting is suitable for foodstuff, potable liquids and inert gases. In accordance with the British Beer & Pub Association Code of Practice, fittings can also be used with N2/CO2 and mixed gas dispense lines, as well as air, pneumatic and vacuum applications. All John Guest fittings are manufactured and assembled in the UK.



Features & Benefits

- Plastic push-fit adaptor for converting to imperial NPTF threads
- Rigid and hardwearing acetal copolymer material
- Food grade material suitable for foodstuff, potable liquids, inert gases, air, pneumatic and vacuum
- Instant push-fit connection and leak tight seal
- Connect, disconnect and reconnect in seconds without tools
- No scale build up improves performance and equipment lifespan
- Superior flow characteristics
- Compatible with LLDPE or soft metal pipe/tube

Product code	Description	Size	Bag QTY
PM010421S	Straight Adaptor (NPTF Thread)	5/32" x 1/8"	10
PM010422S	Straight Adaptor (NPTF Thread)	5/32" x 1/4"	10
PI010621S	Straight Adaptor (NPTF Thread)	3/16" x 1/8"	10
PI010821S	Straight Adaptor (NPTF Thread)	1/4" x 1/8"	10
PI010822S	Straight Adaptor (NPTF Thread)	1/4" x 1/4"	10
PI010823S	Straight Adaptor (NPTF Thread)	1/4" x 3/8"	10
PM010821S	Straight Adaptor (NPTF Thread)	5/16" x 1/8"	10
PM010822S	Straight Adaptor (NPTF Thread)	5/16" x 1/4"	10
PM010823S	Straight Adaptor (NPTF Thread)	5/16" x 3/8"	10
PI011221S	Straight Adaptor (NPTF Thread)	3/8" x 1/8"	10
PI011222S	Straight Adaptor (NPTF Thread)	3/8" x 1/4"	10
PI011223S	Straight Adaptor (NPTF Thread)	3/8" x 3/8"	10
PI011224S	Straight Adaptor (NPTF Thread)	3/8" x 1/2"	10
PI011623S	Straight Adaptor (NPTF Thread)	1/2" x 3/8"	10
PI011624S	Straight Adaptor (NPTF Thread)	1/2" x 1/2"	10
PI011624S	Straight Adaptor (BSPT Thread)	5/8" x 3/4"	10

2 YEAR GUARANTEE

Grey Acetal Straight Adaptor (NPTF Thread)

Application	Maximum & Minimum Temperatire	Maximum working pressure, bar
Potable Liquid	1ºC -65ºC	16 Bar (7 Bar @ 65ºC)

Materials	
Body	Plastic
O-Ring	Nitrile, Black
Collet	Acetal Copolymer (Unfilled)
Collet Teeth	Stainless Steel 301

Application
Potable Liquid
Food Grade Liquid
Inert Gases
Vacuum

Dimensions – All measurements in mm unless otherwise stated

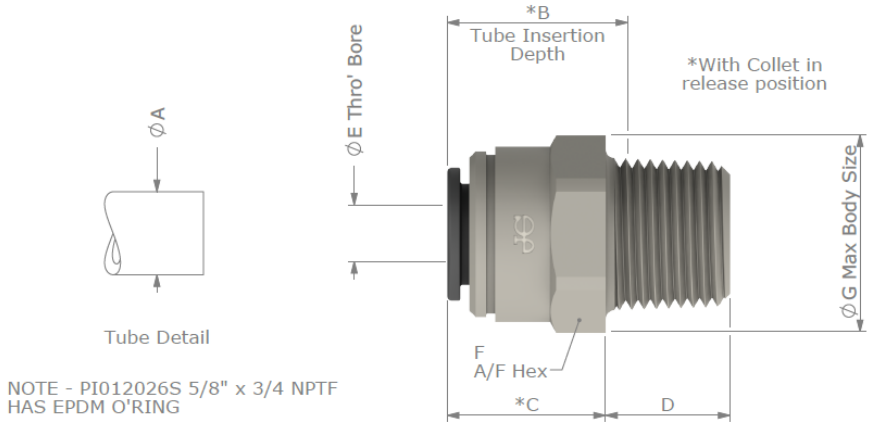

Product No.	Size	Collet Colour	A Tube O/D	B	C	D	E	F	G
PM010421S	5/32" x 1/8 NPTF	Dark Grey	0.156 +0.001 / -0.003 [3.97 +0.03 / -0.07]	0.56 [14.3]	0.60 [15.1]	0.38 [9.5]	0.10 [2.5]	9/16" [14.3]	0.61 [15.4]
PM010422S	5/32" x 1/4 NPTF	Dark Grey		0.56 [14.3]	0.60 [15.1]	0.56 [14.3]	0.10 [2.5]	9/16" [14.3]	0.61 [15.4]
PI010621S	3/16" x 1/8 NPTF	Dark Grey	0.188 +0.001 / -0.003 [4.76 +0.03 / -0.07]	0.56 [14.3]	0.60 [15.1]	0.37 [9.5]	0.12 [3.0]	9/16" [14.3]	0.61 [15.4]
PI010821S	1/4" x 1/8 NPTF	Dark Grey	0.250 +0.001 / -0.004 [6.35 +0.03 / -0.10]	0.62 [15.7]	0.69 [17.5]	0.37 [9.5]	0.17 [4.4]	0.67 [17.0]	0.75 [19.1]
PI010821S-B	1/4" x 1/8 NPTF	Blue		0.62 [15.7]	0.69 [17.5]	0.37 [9.5]	0.17 [4.4]	0.67 [17.0]	0.75 [19.1]
PI010822S	1/4" x 1/4 NPTF	Dark Grey		0.62 [15.7]	0.54 [13.7]	0.56 [14.3]	0.17 [4.4]	11/16" [17.5]	0.75 [19.1]
PI010822S-B	1/4" x 1/4 NPTF	Blue		0.62 [15.7]	0.54 [13.7]	0.56 [14.3]	0.17 [4.4]	11/16" [17.5]	0.75 [19.1]
PI010823S	1/4" x 3/8 NPTF	Dark Grey		0.62 [15.7]	0.54 [13.7]	0.56 [14.3]	0.17 [4.4]	13/16" [20.6]	0.89 [22.6]
PM010821S	5/16" x 1/8 NPTF	Dark Grey	0.313 +0.001 / -0.004 [7.94 +0.03 / -0.10]	0.66 [16.7]	0.73 [18.5]	0.38 [9.5]	0.22 [5.5]	11/16" [17.5]	0.75 [19.1]
PM010822S	5/16" x 1/4 NPTF	Dark Grey		0.66 [16.7]	0.55 [13.9]	0.56 [14.3]	0.22 [5.5]	11/16" [17.5]	0.75 [19.1]
PM010823S	5/16" x 3/8 NPTF	Dark Grey		0.66 [16.7]	0.55 [13.9]	0.56 [14.3]	0.22 [5.5]	13/16" [20.6]	0.89 [22.6]
PI011221S	3/8" x 1/8 NPTF	Dark Grey	0.375 +0.001 / -0.004 [9.53 +0.03 / -0.10]	0.78 [19.7]	0.84 [21.2]	0.43 [10.9]	0.16 [4.1]	13/16" [20.6]	0.89 [22.5]
PI011221S-R	3/8" x 1/8 NPTF	Red		0.78 [19.7]	0.84 [21.2]	0.43 [10.9]	0.16 [4.1]	13/16" [20.6]	0.89 [22.5]
PI011222S	3/8" x 1/4 NPTF	Dark Grey		0.78 [19.7]	0.84 [21.2]	0.56 [14.3]	0.25 [6.4]	13/16" [20.6]	0.89 [22.6]
PI011222S-R	3/8" x 1/4 NPTF	Red		0.78 [19.7]	0.84 [21.2]	0.56 [14.3]	0.25 [6.4]	13/16" [20.6]	0.89 [22.6]
PI011223S	3/8" x 3/8 NPTF	Dark Grey		0.78 [19.7]	0.68 [17.2]	0.56 [14.3]	0.25 [6.4]	13/16" [20.6]	0.89 [22.6]
PI011224S	3/8" x 1/2 NPTF	Dark Grey		0.78 [19.7]	0.57 [14.5]	0.75 [19.0]	0.31 [8.0]	7/8" [22.2]	0.96 [24.3]
PI011623S	1/2" x 3/8 NPTF	Dark Grey	0.500 +0.001 / -0.004 [12.70 +0.03 / -0.10]	0.91 [23.0]	0.88 [22.3]	0.56 [14.3]	0.37 [9.4]	1" [25.4]	1.11 [28.3]
PI011624S	1/2" x 1/2 NPTF	Dark Grey		0.91 [23.0]	0.71 [18.0]	0.75 [19.0]	0.38 [9.6]	1" [25.4]	1.10 [28.0]
PI012026S	5/8" x 3/4 NPTF	Dark Grey	0.625 +0.001 / -0.004 [12.70 +0.03 / -0.10]	1.20 [30.5]	1.46 [37.0]	0.71 [18.1]	0.52 [13.2]	N/A	1.10 [28.0]